MODEL 250400

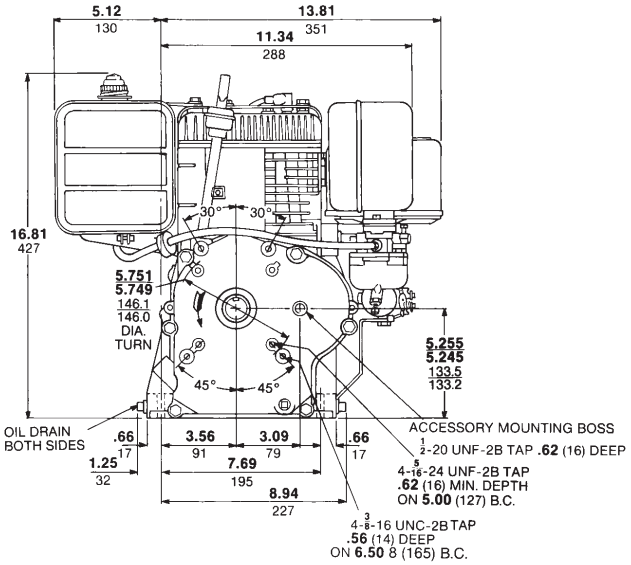

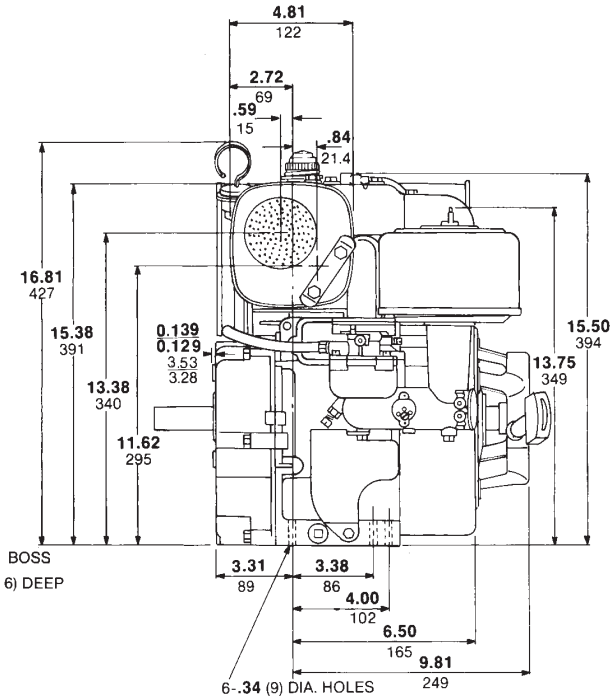
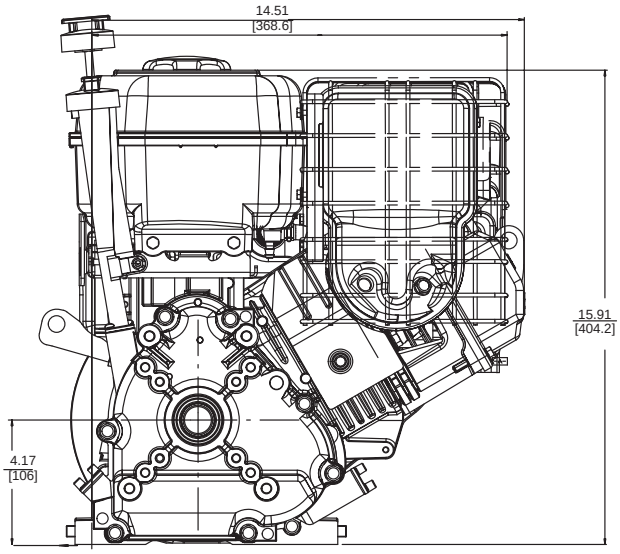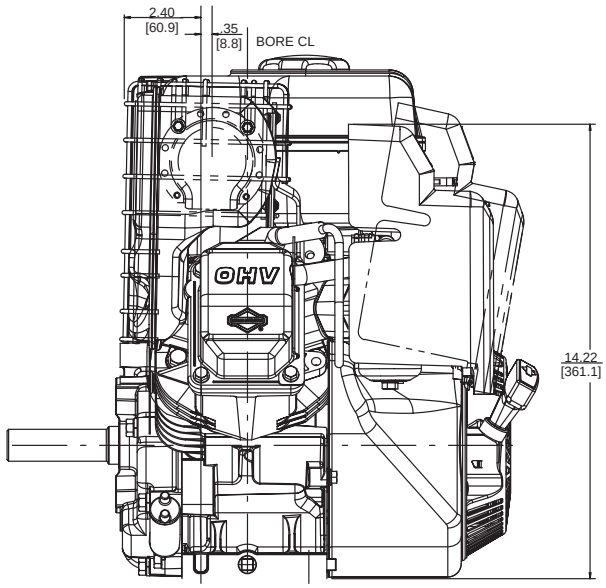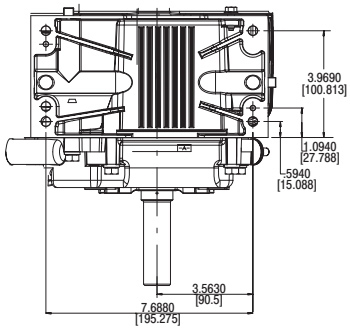
MODEL 200000